GVLT 53.00X53.00

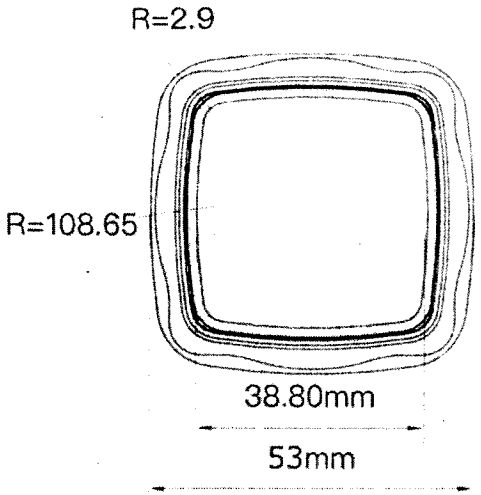

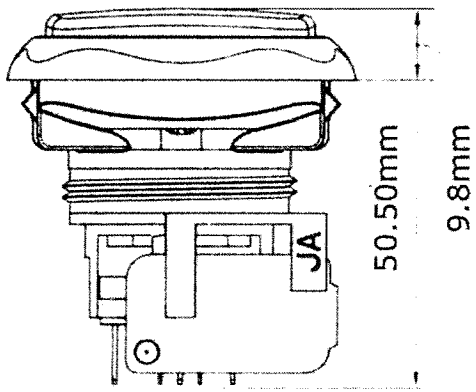

R=9

PANEL MOUNTING

46.54mm

	W	RGB
1	SW NC (PURPLE)	+12V (ORANGE)
2		G
3	+12V (ORANGE)	B
4	SW NO (BROWN)	SW NO (BROWN)
5	GND LED (WHITE)	R
6		COM (BLACK)
7	COM (BLACK)	

W

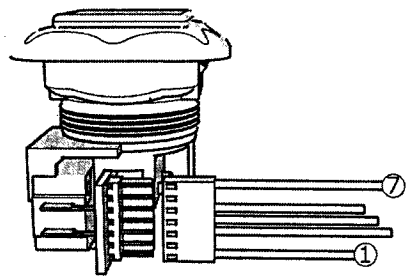

RGB

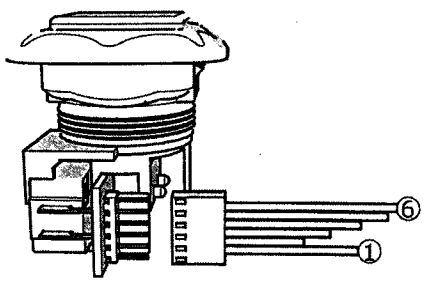

W RGB

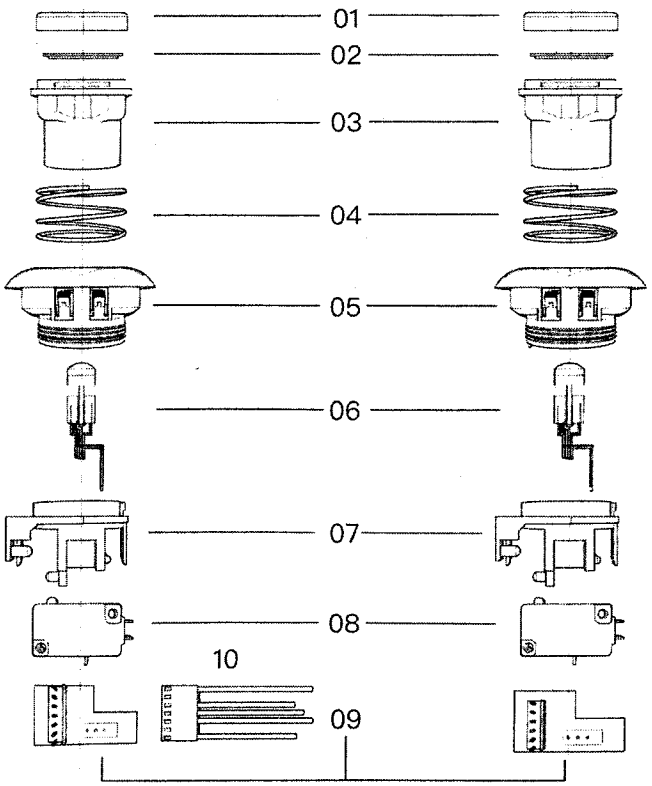

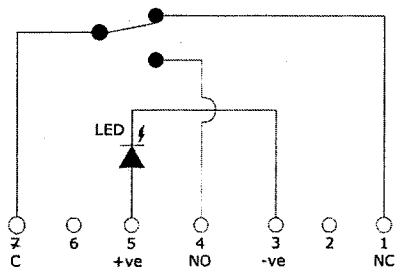

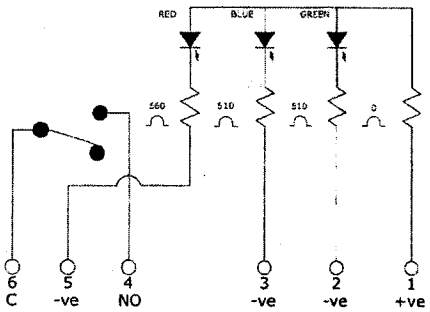

No	PART LIST	Material
01	LENS CAP	P C
02	LENSE	P C
03	PLUNGER	P C
04	SPRING	SUS 304
05	BEZEL	P C
06	LED	12VDC
07	LAMPHOLDER	P O M
08	MICRO SWITCH	G5 UL
09	PCB	1.6mm V0
10	CONNECTER	NH 2.54